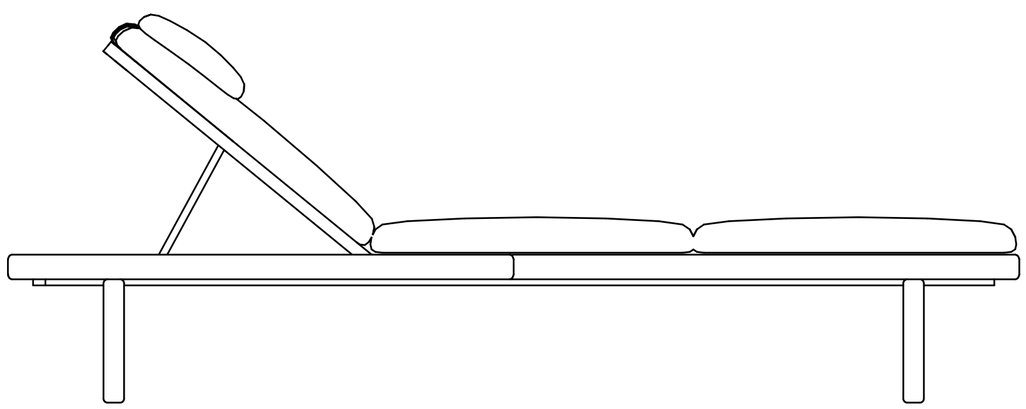

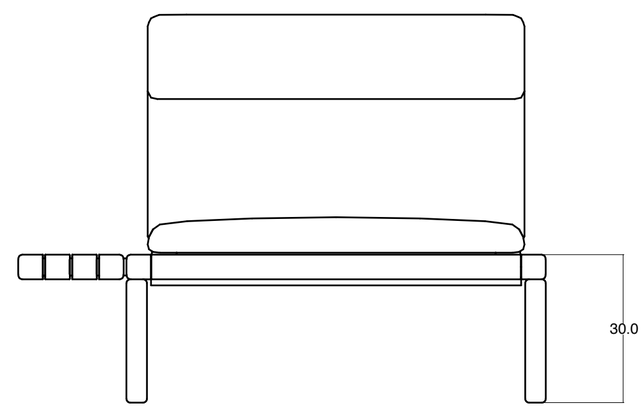
30.0

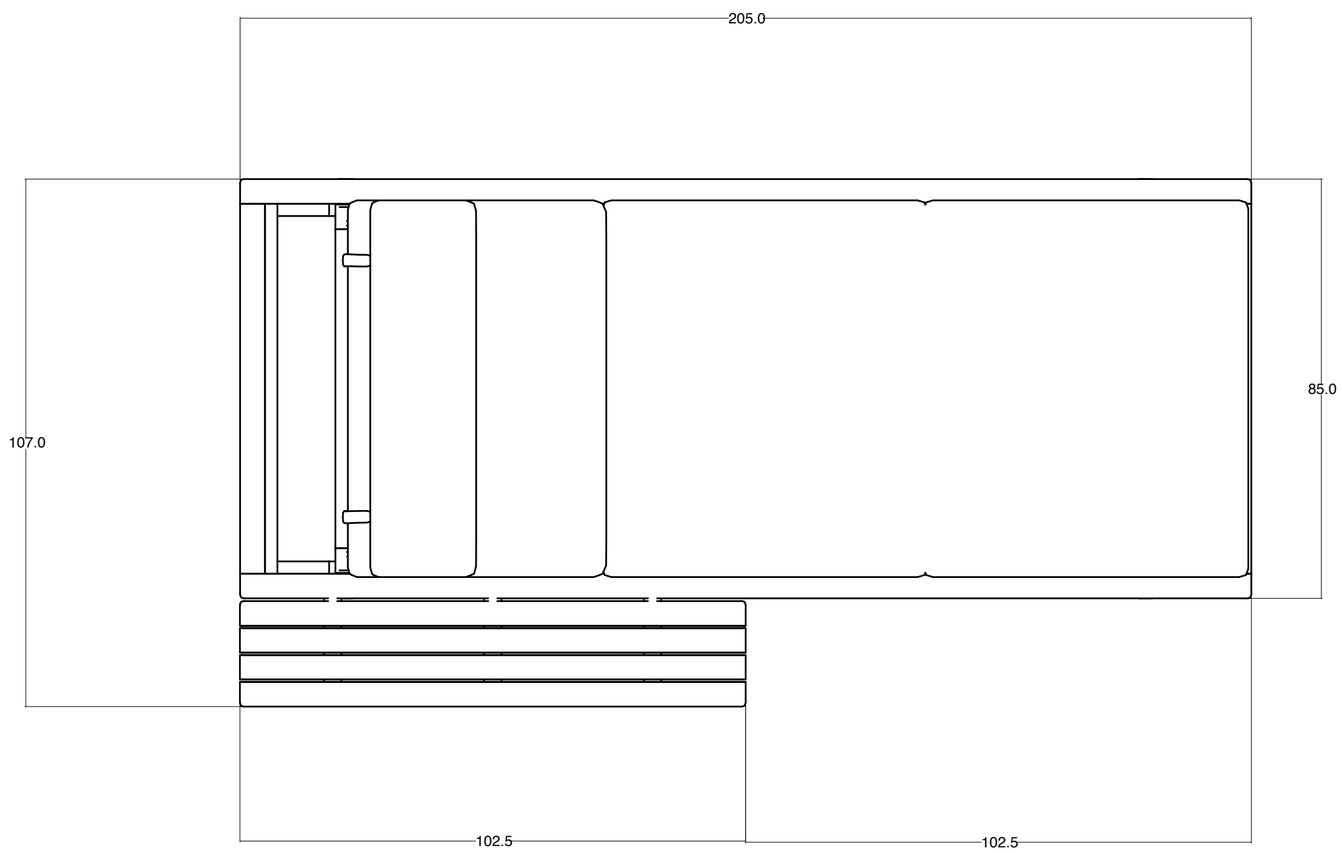
205.0
107.0
85.0
102.5
102.5