BUNGALOW TABLE JAMIE DURIE 2019

Table with structure in solid teak wood, turned, assembled and smoothed by hand, with square-shaped base combined with a marble top with rounded and protruding edges.

STANDARD VERSION: EMPERADOR DARK MARBLE TOP IN POLISHED FINISH (F1)

CODE	SIZE	TOP	A11
BUNGALOW TABLE 1	W.110 x D.110 x H.75	F1	■
		F2	■
BUNGALOW TABLE 2	W.220 x D.110 x H.75	F1	■
		F2	■

AVAILABLE FINISHES:
A11: teak
F1: emperador dark marble, verde alpi marble,
N.B.: sahara noir stoneware: availability upon request
F2: calacatta marble

BUNGALOW TABLE 1

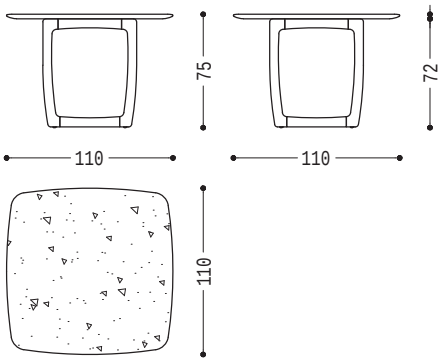

BUNGALOW TABLE 2

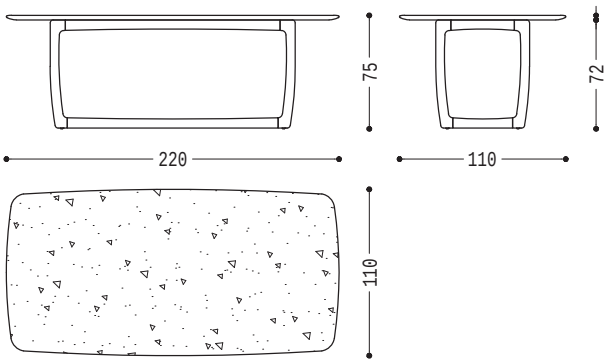

BUNGALOW TABLE | AVAILABLE FINISHES

WOOD

A11

teak

OTHER MATERIALS

F1

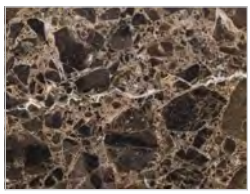

emperador dark marble

verde alpi marble

F2

calacatta marble